Engine 177 in model 205, 253

Shown on engine 177 in model 205

1 Oil filter cover
2 Oil filter element
3 Sealing ring
4 Oil dipstick
5 Oil-dipstick guide tube
15 Drain screw

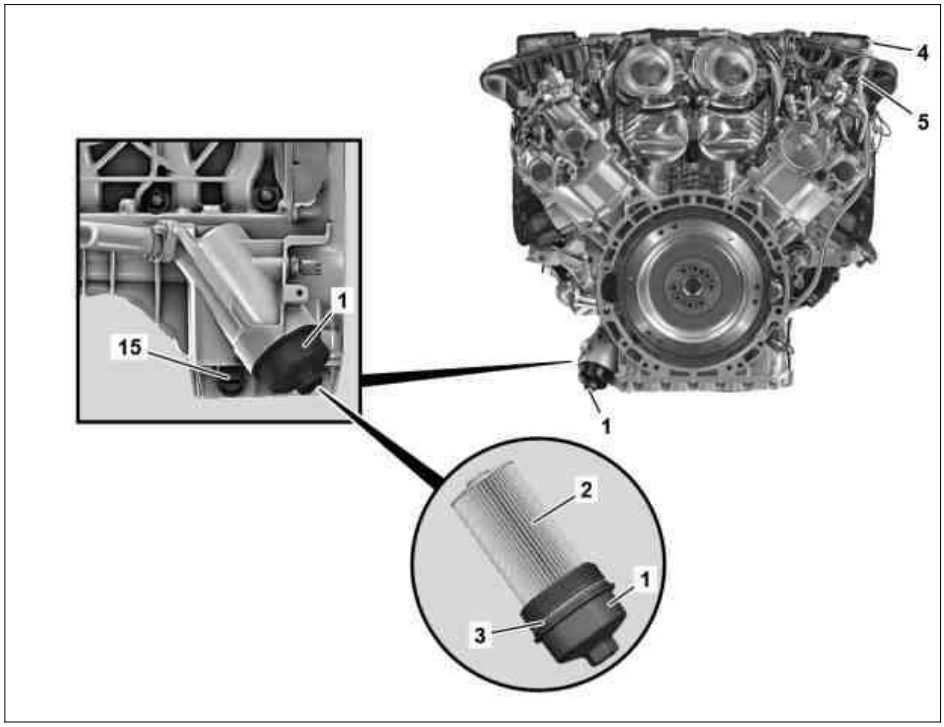

P18.00-2409-06

⚠ Caution	**Risk of injury** to skin and eyes due to handling of engine oil. **Risk of poisoning** caused by swallowing engine oil	Wear protective gloves, protective clothing and safety glasses. Do not fill engine oil into beverage containers.	AS18.00-Z-0001-01A
⚠ Warning	**Risk of accident** from vehicle starting off by itself when engine running. **Risk of injury** (bruises and burns) resulting from working on the engine while it is being started or when it is running.	Secure vehicle to prevent it from starting off by itself. Wear closed and snug-fitting work clothes. Do not touch hot or rotating parts.	AS00.00-Z-0005-01A
	Risk of death caused by vehicle slipping or toppling off of the lifting platform.	Align vehicle between vehicle lift columns and position the four support plates at the vehicle lift support points specified by the vehicle manufacturer.	AS00.00-Z-0010-01A
	Notes on engine oil and filter changes		AH18.00-P-0104-01A
⛶	**Remove**		
1	Allow engine to warm up	ℹ Engine oil temperature ≥ 90 °C.	
2	Switch off engine		
3 ☞AR	Remove engine compartment paneling at rear		AR61.20-P-1105LW
4	Remove drain screw (15) and drain engine oil	ℹ Dispose of old drain screw (15).	
5	Remove oil filter cover (1)	ℹ Remove oil filter cover (1) far enough from oil filter housing until the engine oil can drain out of the oil filter element (2) and the oil filter housing.	
6	Remove oil filter cover (1)		
⛶	**Install**		
7	Replace oil filter element (2)		
8	Replace seal (3)		
9	Install oil filter cover(1)	Nm Oil filter cover to oil pan	*BA01.45-P-1002-01Y
10	Screw-in new drain screw(15)	Nm Plastic drain screw to oil pan bottom section	*BA01.45-P-1007-01Y
11 ☞AR	Install rear engine compartment paneling		AR61.20-P-1105LW

© Daimler AG, 3/6/19, L/11/18, ap18.00-p-0101d, Engine oil and oil filter change
Engine 177 in model 205, 253

12	Add engine oil	Use approved engine oils SAE 0W-40 or 5W-40 only. Engine damage can occur otherwise. Engine oil filling capacity (oil change and filter change)	*BF18.00-P-1001-01DA
	Check		
13	Run engine until it is at operating temperature, and check for leak tightness	Engine oil temperature ≥ 90 °C. In the event of leakage ↓ Determine and rectify cause, subject to separate repair order.	
14	Switch off engine		
15	Check engine oil level; correct if necessary	Check engine oil level using on-board oil dipstick Engine 177 in model 205 Check engine oil level with instrument clusterEngine 177 in model 253	AP18.00-P-1811MP AP18.00-P-1812CKI

Oil pan

Number	Designation		Engine 177
BA01.45-P-1002-01Y	Oil filter cover to oil pan	Nm	25

Oil pan

Number	Designation			Engine 177
BA01.45-P-1007-01Y	Plastic drain screw to oil pan bottom section	Maximum	Nm	4

Engine lubrication system

Number	Designation		Engine 177
BF18.00-P-1001-01DA	Engine oil filling capacity (oil change and filter change)	l	9
	Sheet		BB00.40-P-0223-02A